KLASIKA
GREENHOUSES

made in
LITHUANIA

CE
EN 1090-1:2009+A1:2011
No. 2268-CPR-419

kiwa
No. 2268

KLASIKA TUBE



6 m²

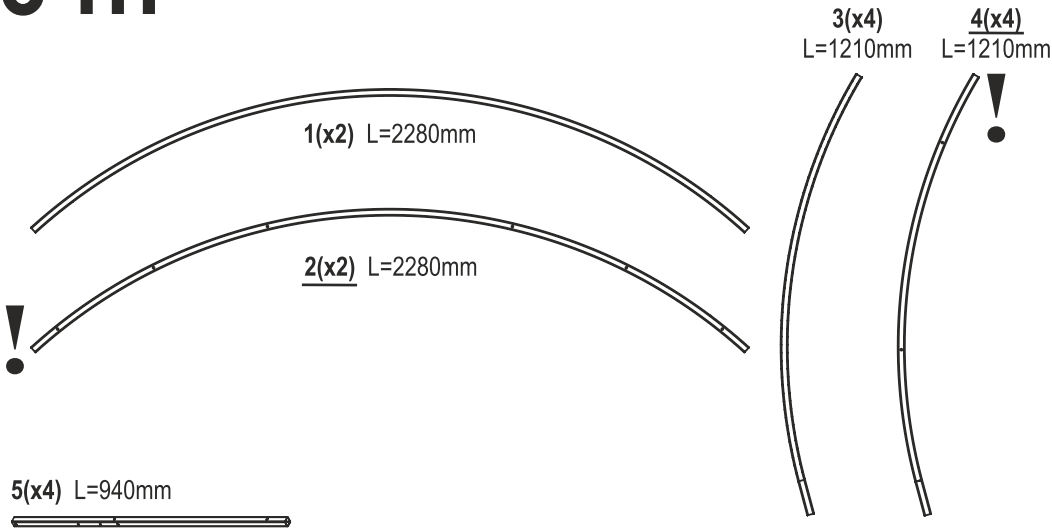

5(x4) L=940mm

6(x4) L=940mm

7(x12) L=175mm

8(x4) L=2000mm

9(x3) L=643mm

10(x2) L=2210mm

11(x2) L=2210mm

12(x4) L=970mm

13(x2) L=1320mm

14(x1) L=965mm

D1(x3) L=885mm

D2(x3) L=885mm

D3(x6) L=950mm

D4(x3) L=885mm

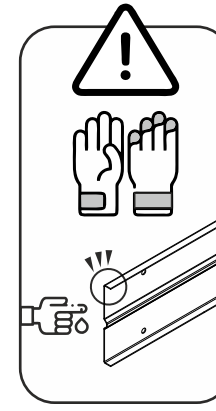

17(x4) L=1515mm

16(x2) L=2010mm

6 m²

18(x4)

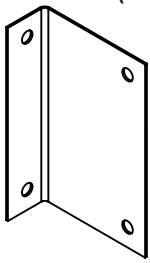

33(x5)

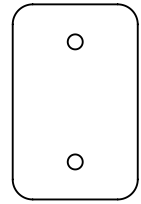

19(x4)

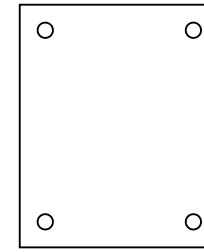

30(x24)

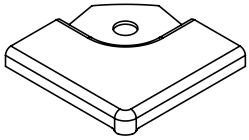

31(x60)

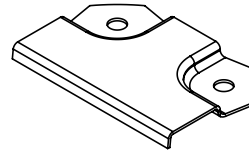

32(x20)

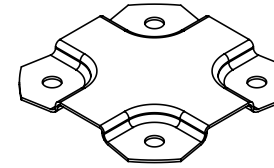

20(x132)



M5-16

21(x196)

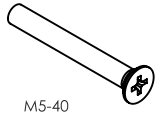

M5-40

22(x12)

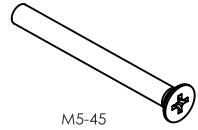

M5-45

25(x340)



M5

24(x4)



28(x56)

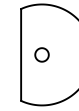

27(x68)

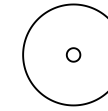

33(x3)

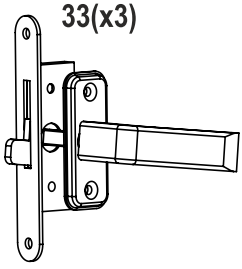

36(x4)

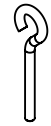

37(x2)



34(x1)

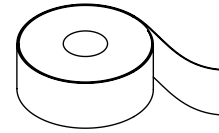

38(x6)

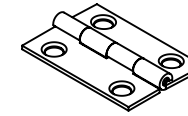

23(x6)

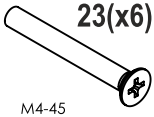

M4-45

26(x6)



M4

39(x2)

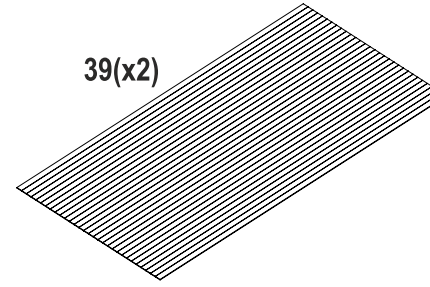

12 m²

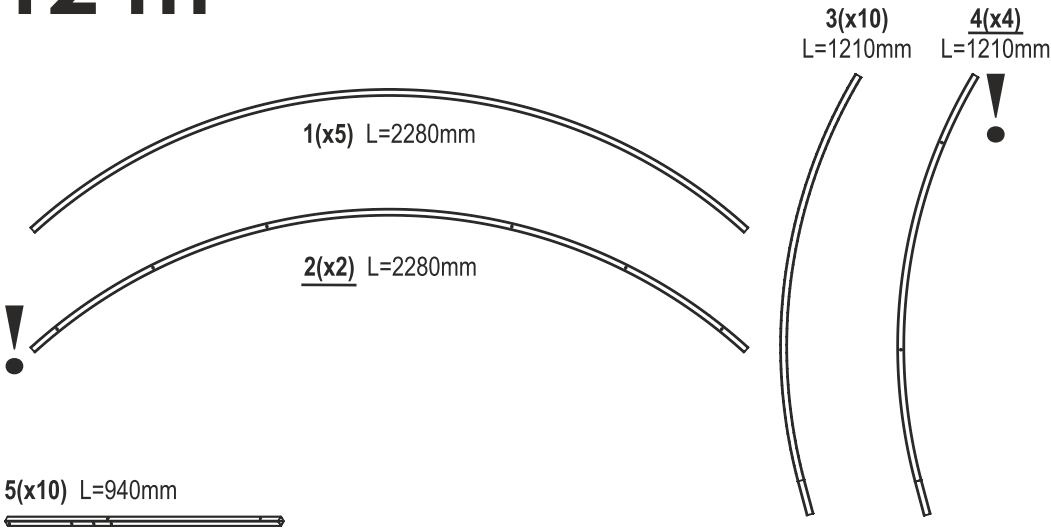

5(x10) L=940mm

6(x4) L=940mm

7(x18) L=175mm

8(x8) L=2000mm

9(x6) L=643mm

10(x2) L=2210mm

11(x2) L=2210mm

12(x4) L=970mm

13(x2) L=1320mm

14(x1) L=965mm

D1(x3) L=885mm

D2(x3) L=885mm

D3(x6) L=950mm

D4(x3) L=885mm

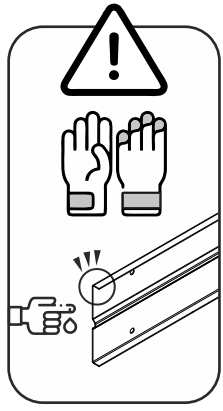

17(x4) L=1515mm

16(x2) L=2010mm

15(x2) L=1990mm

12 m²

18(x4)

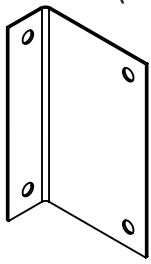

33(x5)

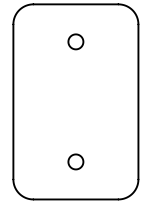

19(x8)

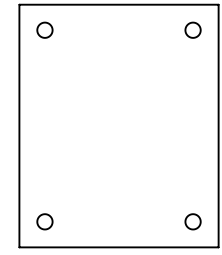

30(x24)

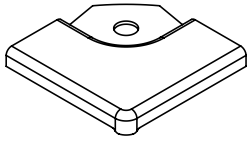

31(x60)

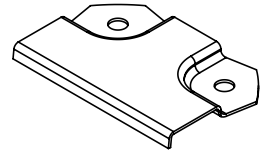

32(x50)

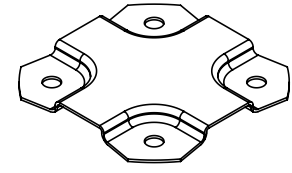

20(x192)



M5-16

21(x236)

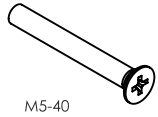

M5-40

22(x18)

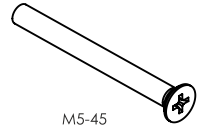

M5-45

25(x446)



M5

24(x4)



28(x56)

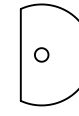

27(x92)

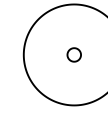

33(x3)

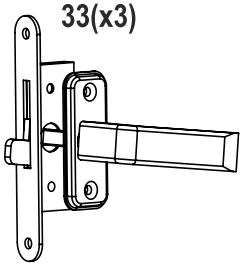

36(x4)

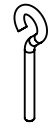

37(x2)



34(x1)

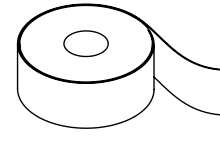

38(x6)

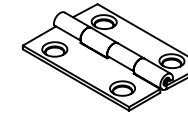

23(x6)

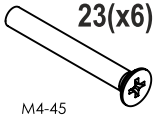

M4-45

26(x6)



M4

39(x3)

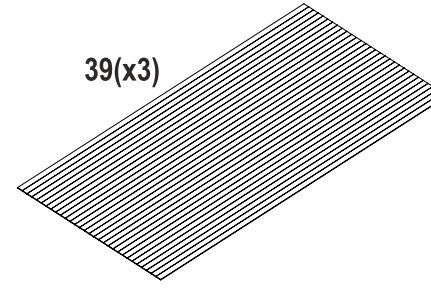

2m Greenhouse Extension

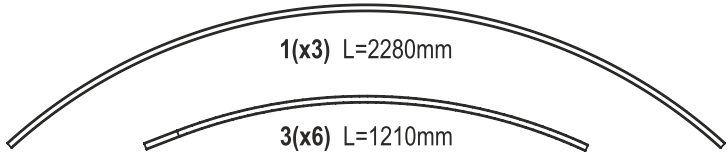

5(x6) L=940mm

7(x6) L=175mm

8(x4) L=2000mm

9(x3) L=643mm

15(x2) L=1990mm

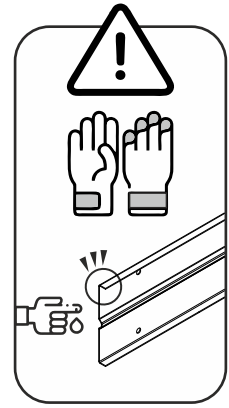

19(x4)

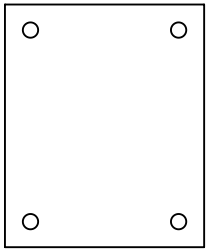

32(x30)

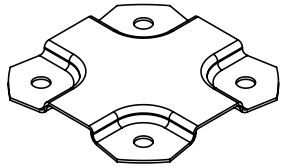

20(x60)



M5-16

21(x36)

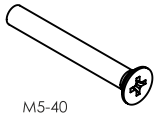

M5-40

22(x6)

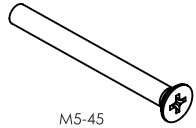

M5-45

39(x1)

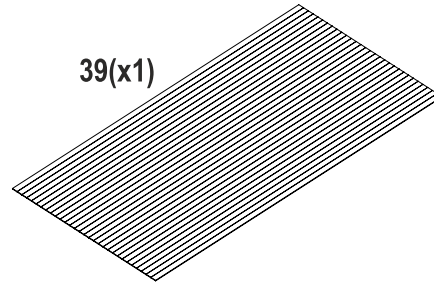

25(x102)



M5

27(x24)

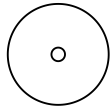

2m Greenhouse Extension

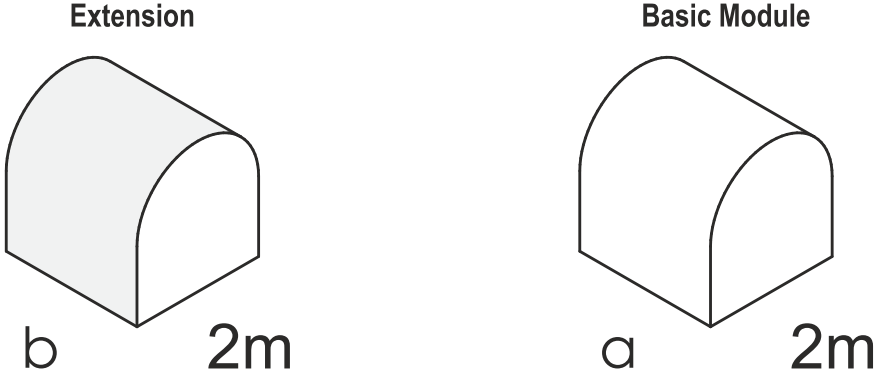

Example of Greenhouse Extension Installation

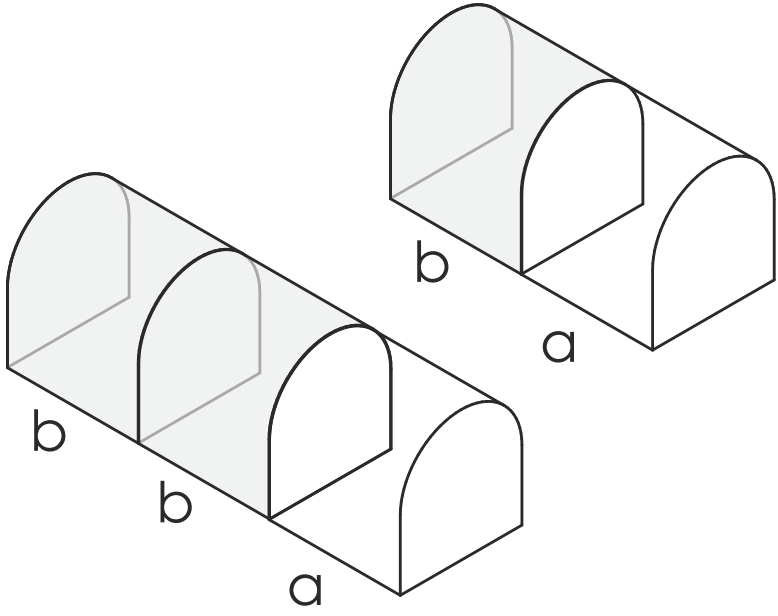

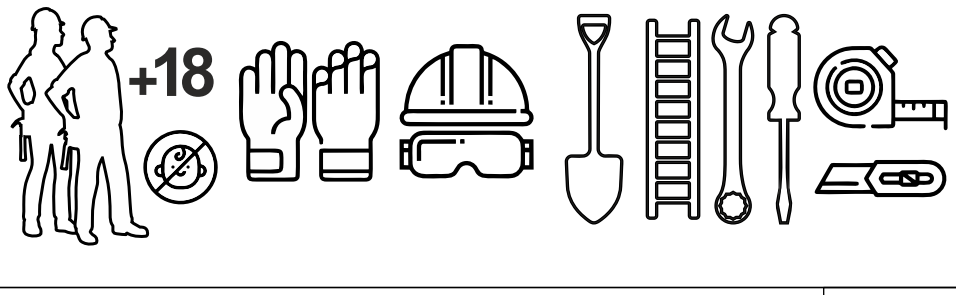

1

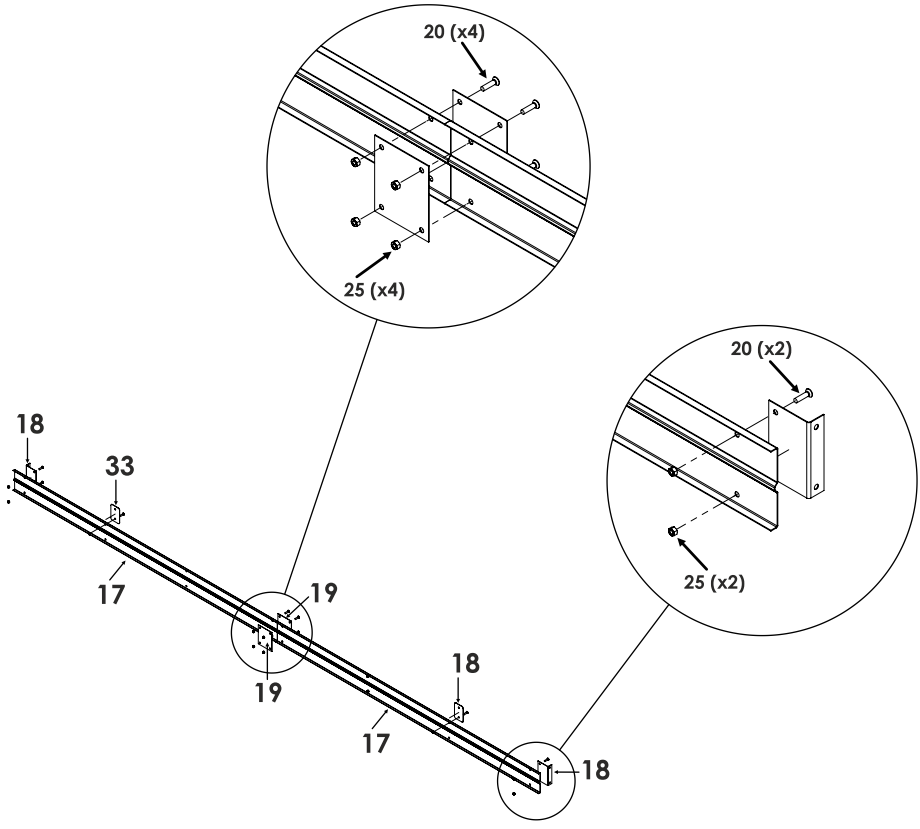

2

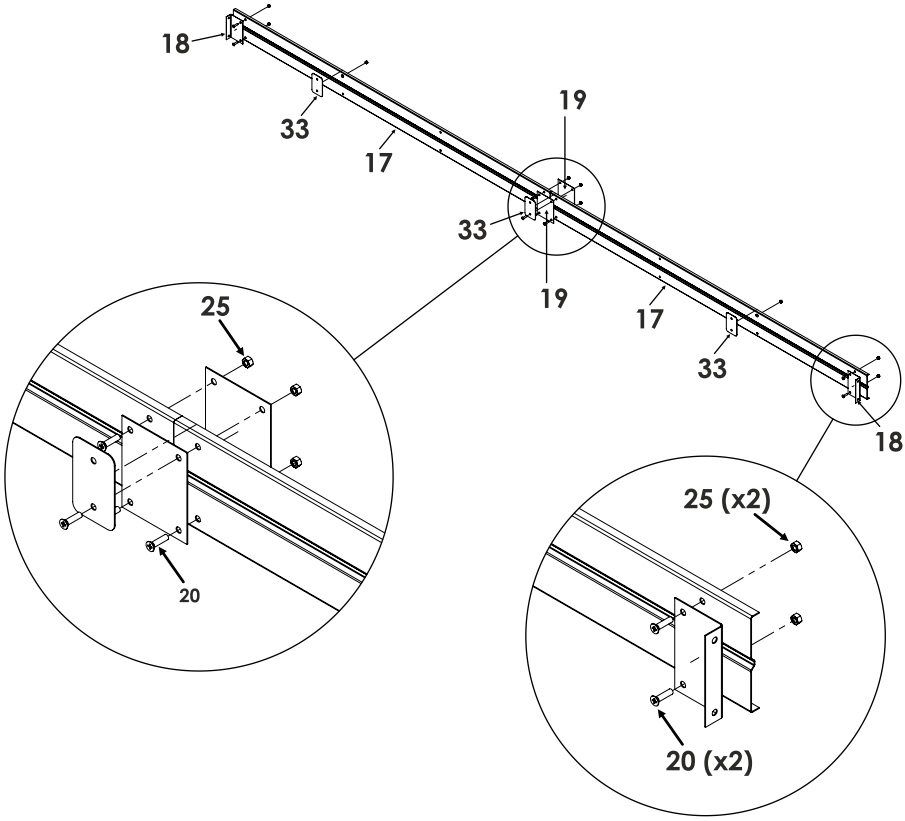

3

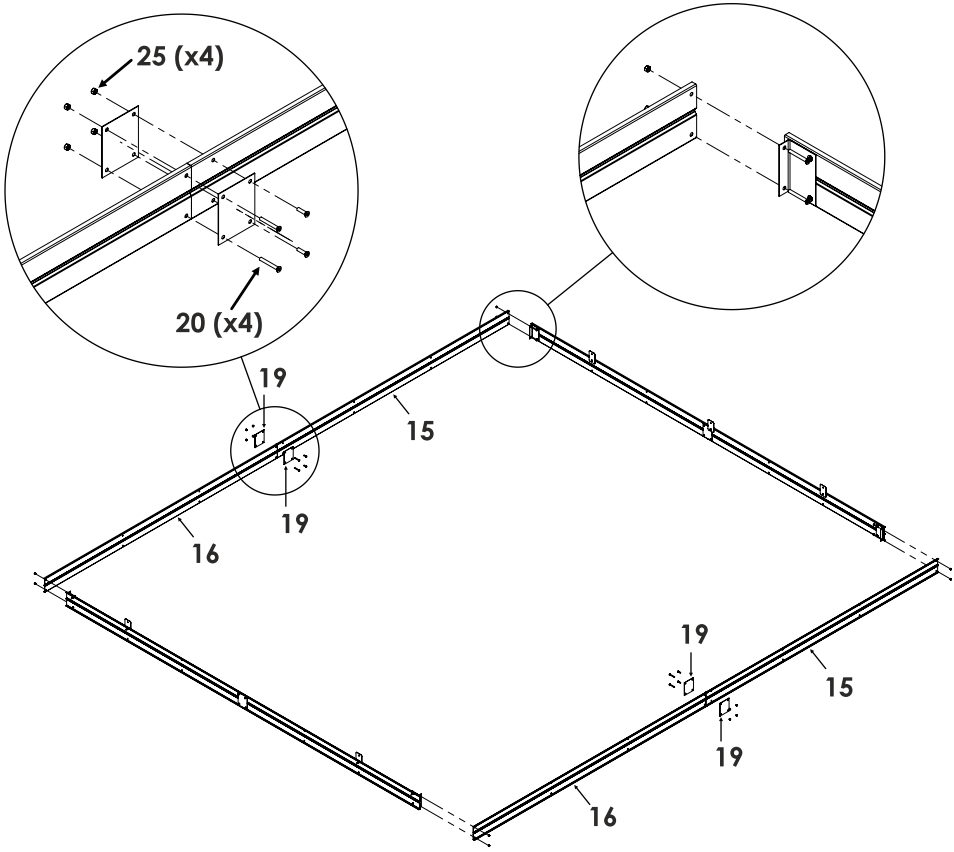

4

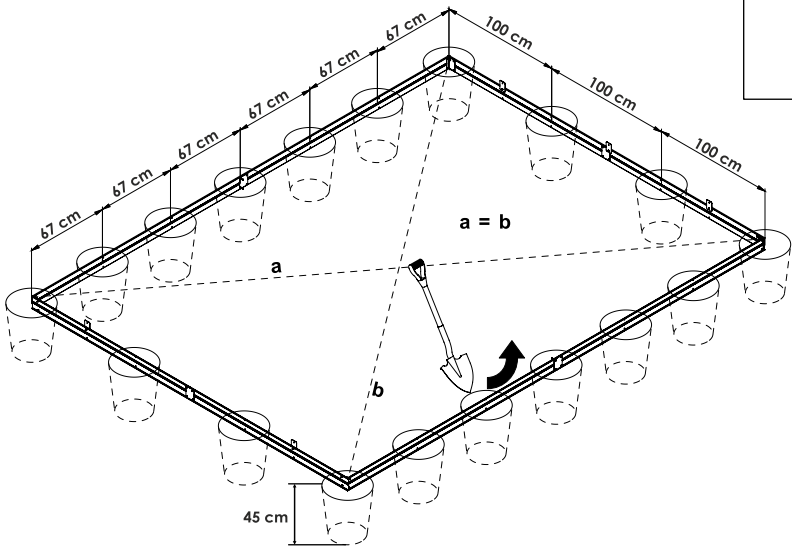
67 cm
67 cm
67 cm
67 cm
67 cm
67 cm
100 cm
100 cm
100 cm
a = b
a
b
45 cm

5

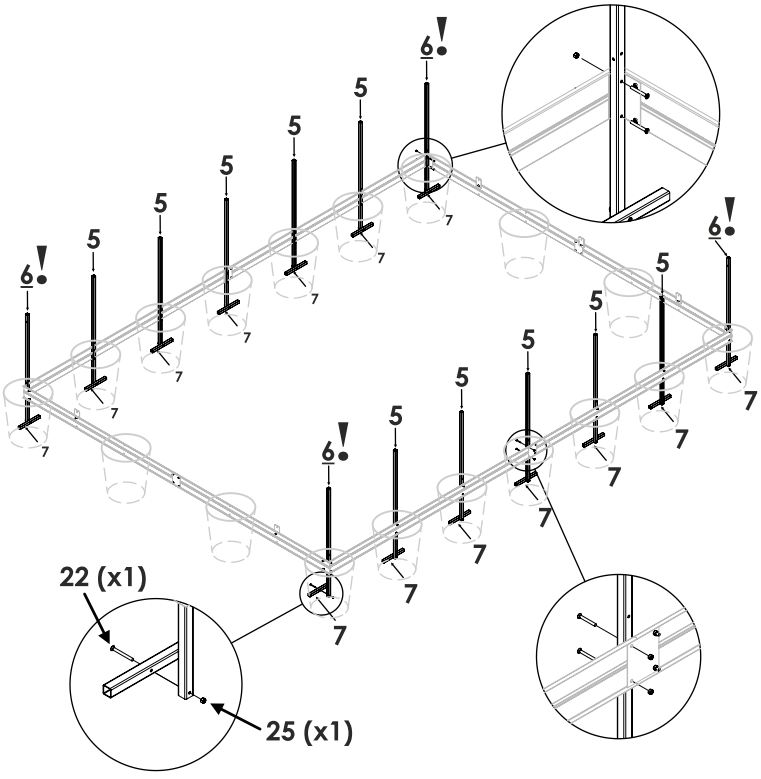
6!
5
7
22 (x1)
25 (x1)

6

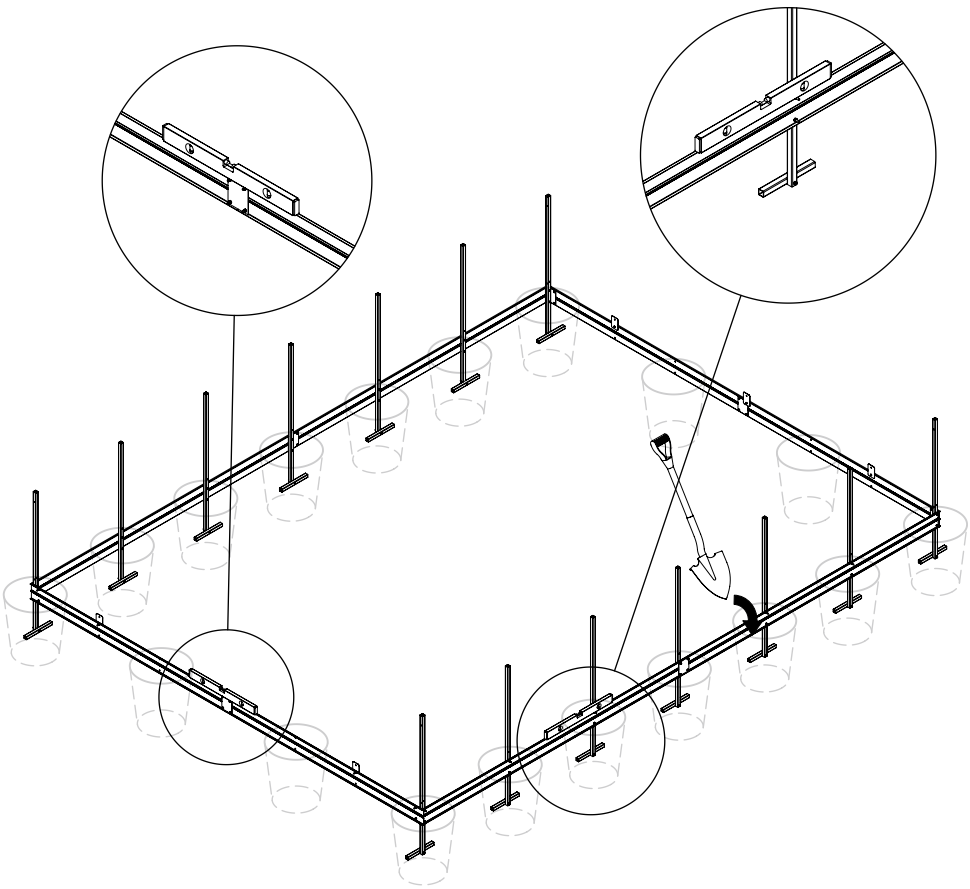

7

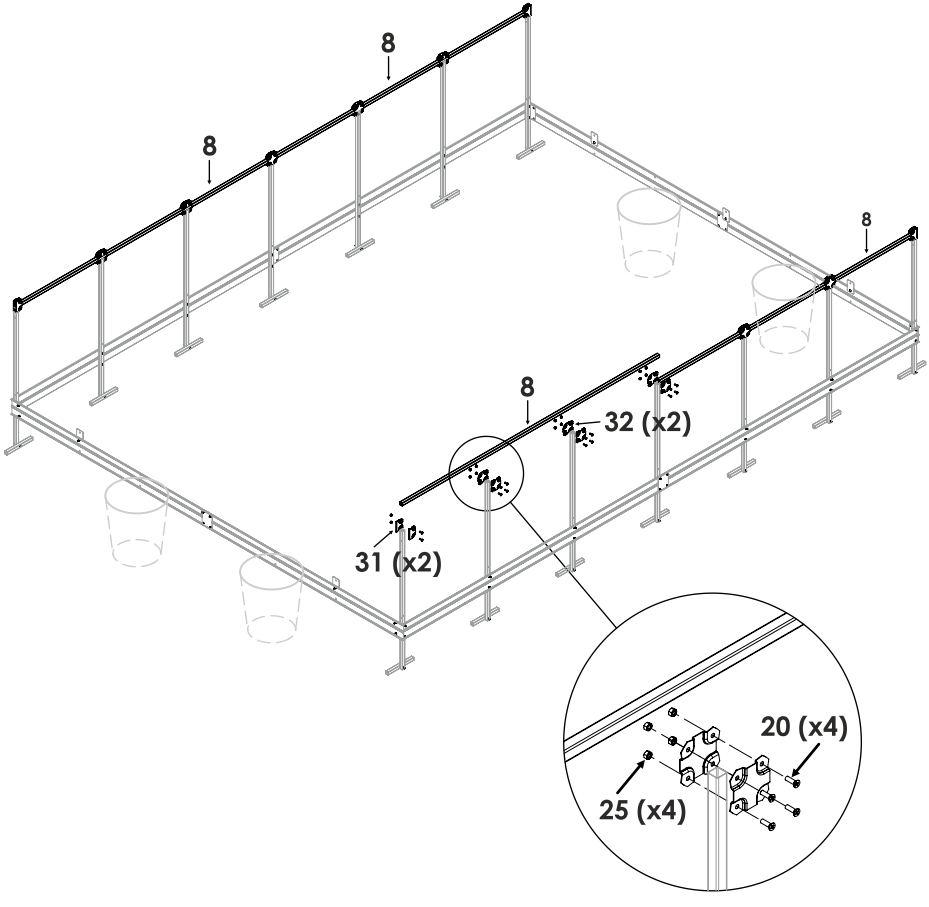

8

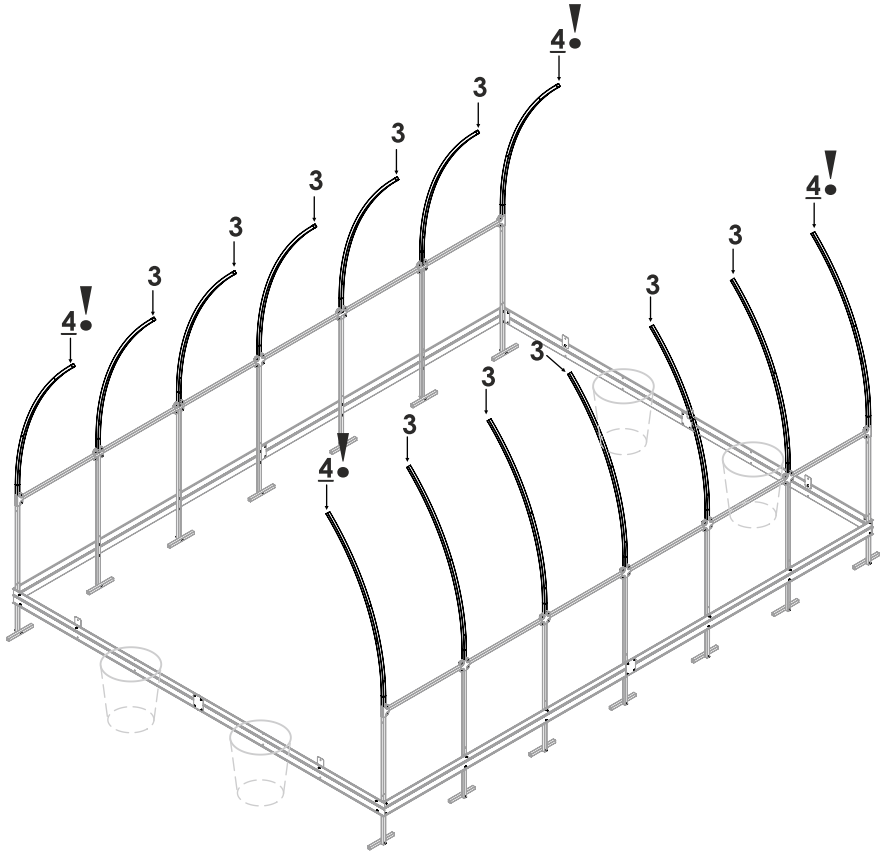

9

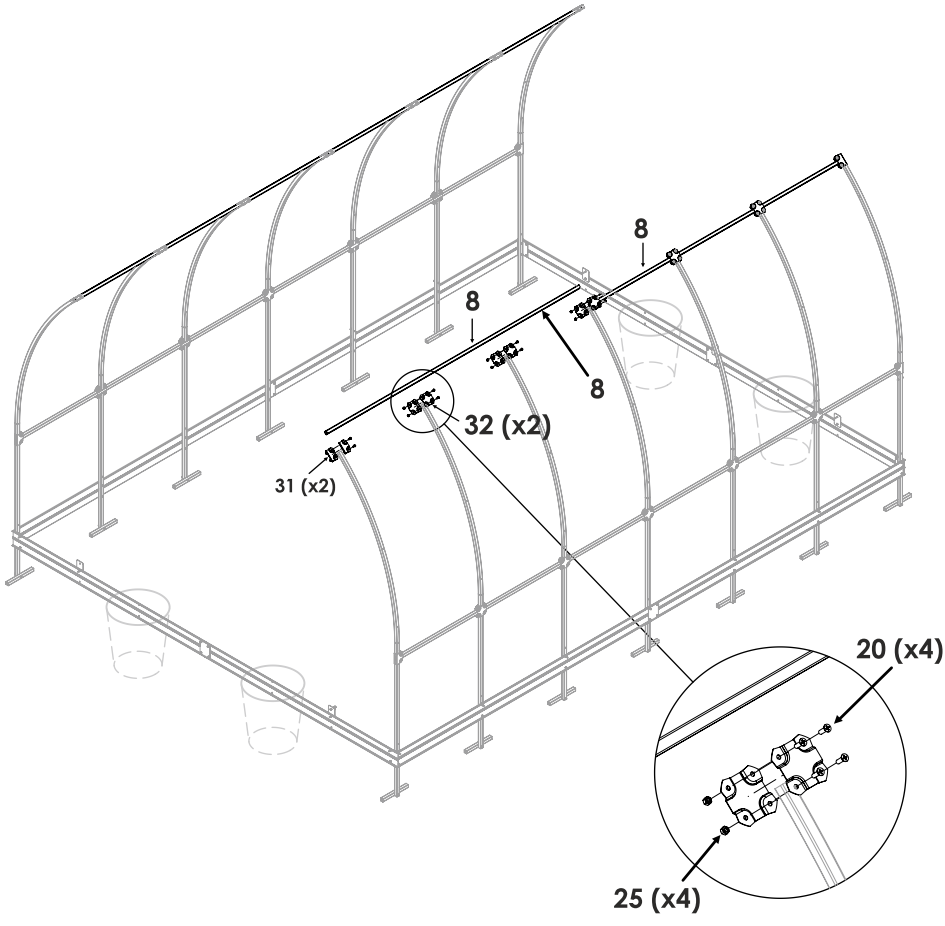

10

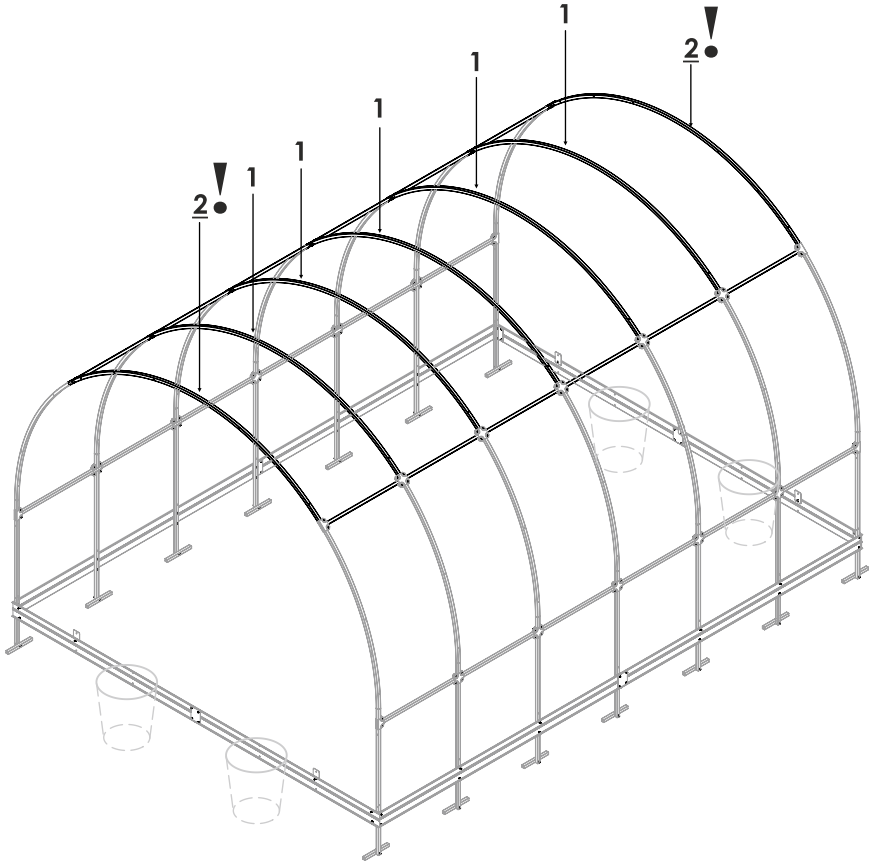

11

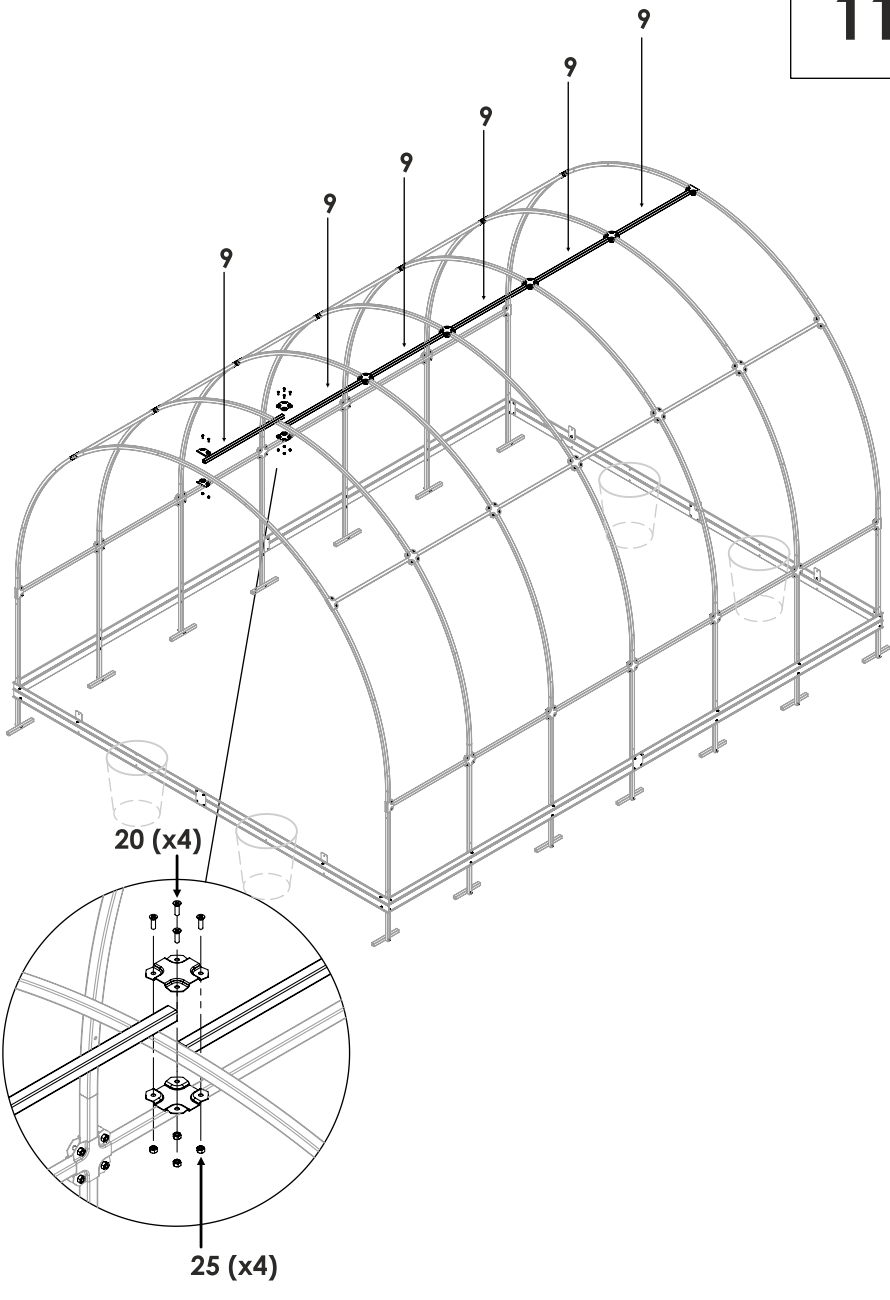

12

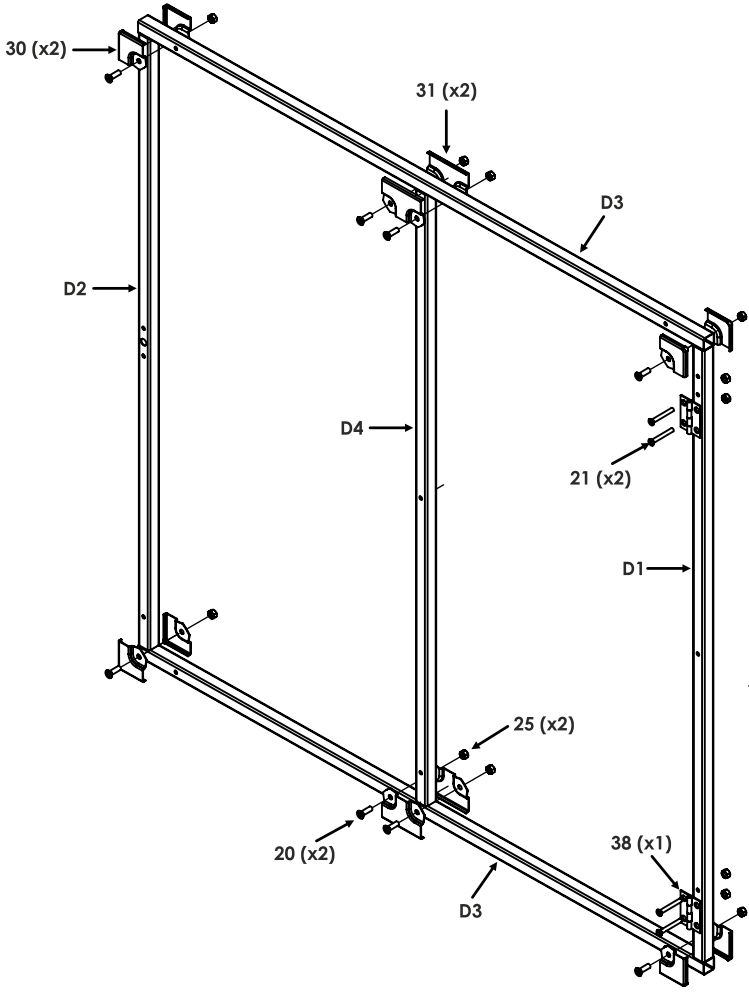

13

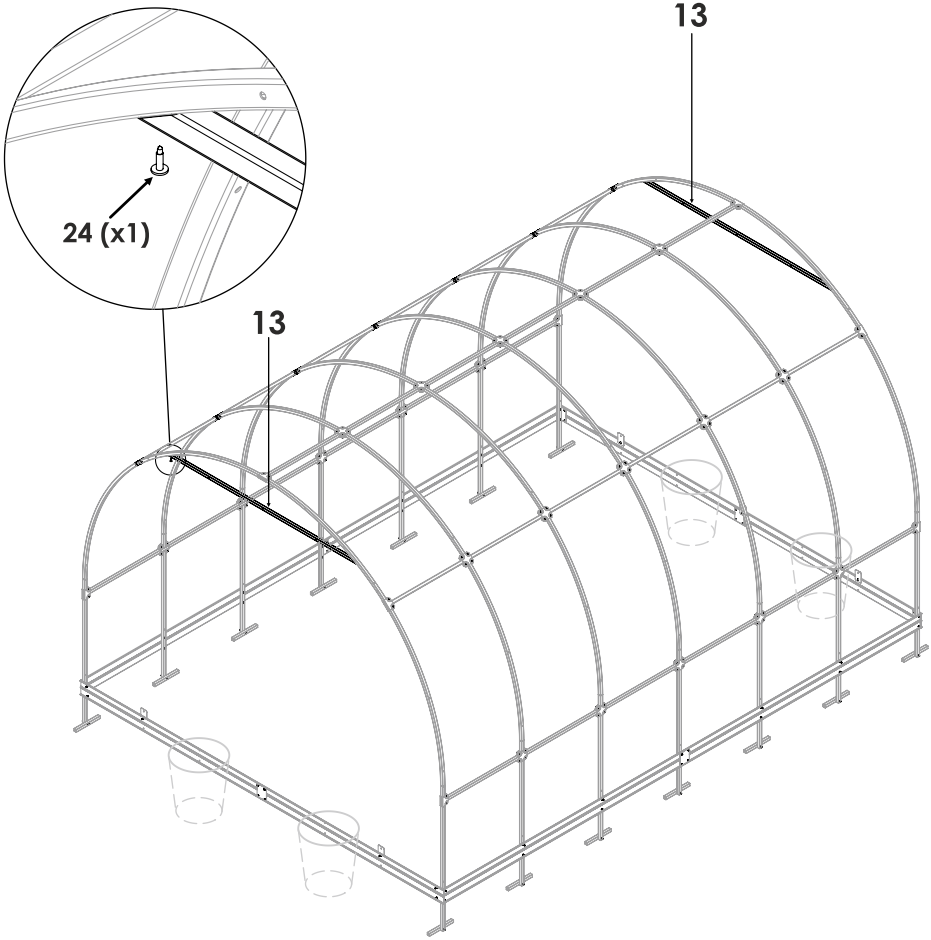

14

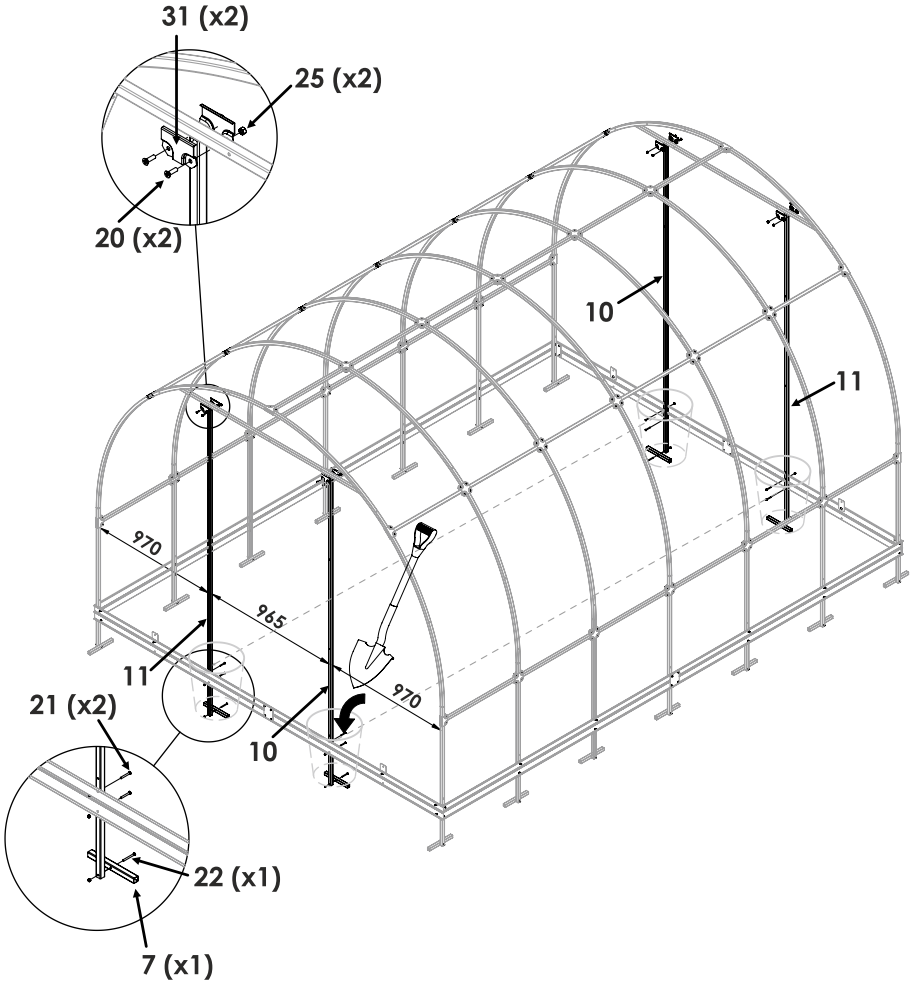

15

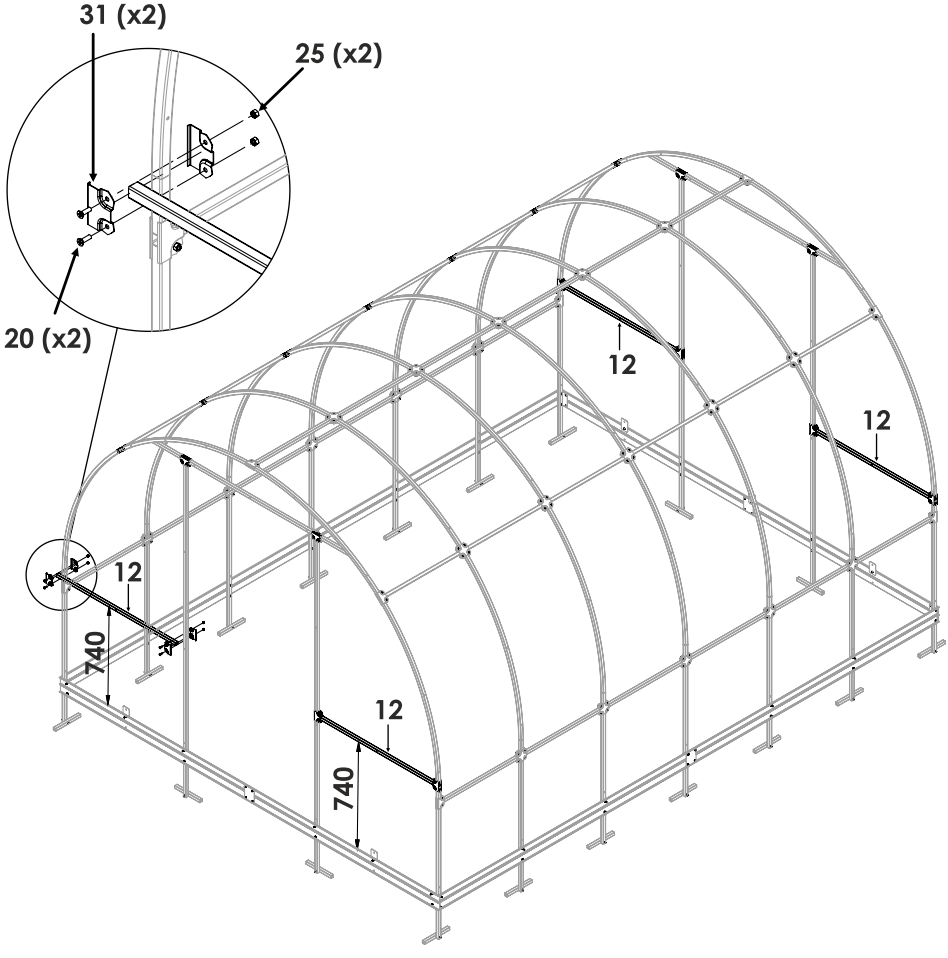

16

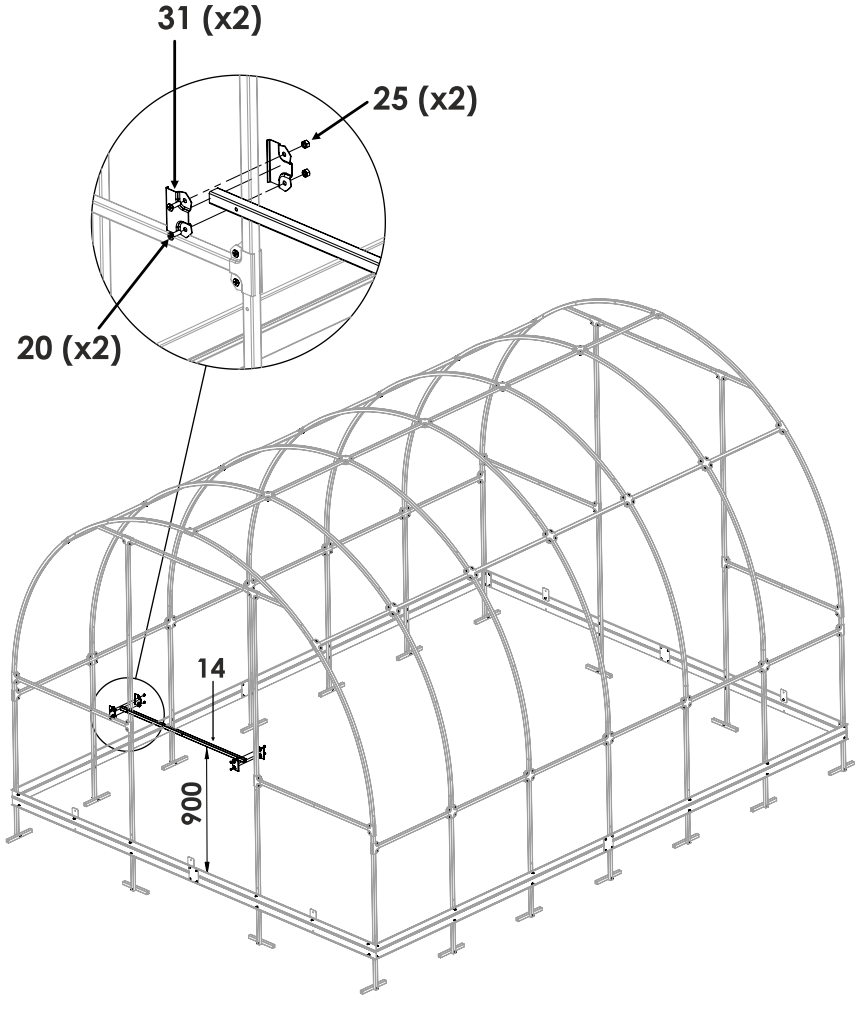

Polycarbonate cutting diagram

17

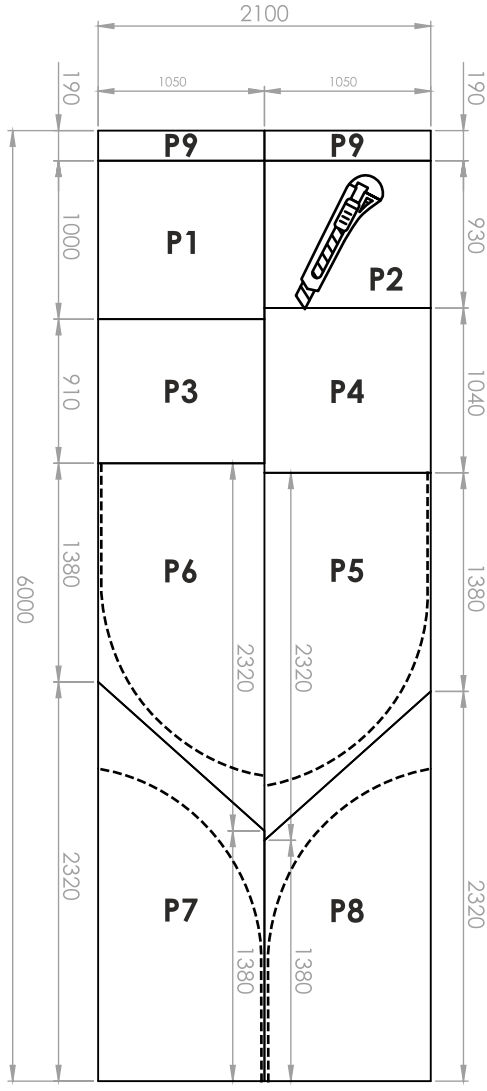

18

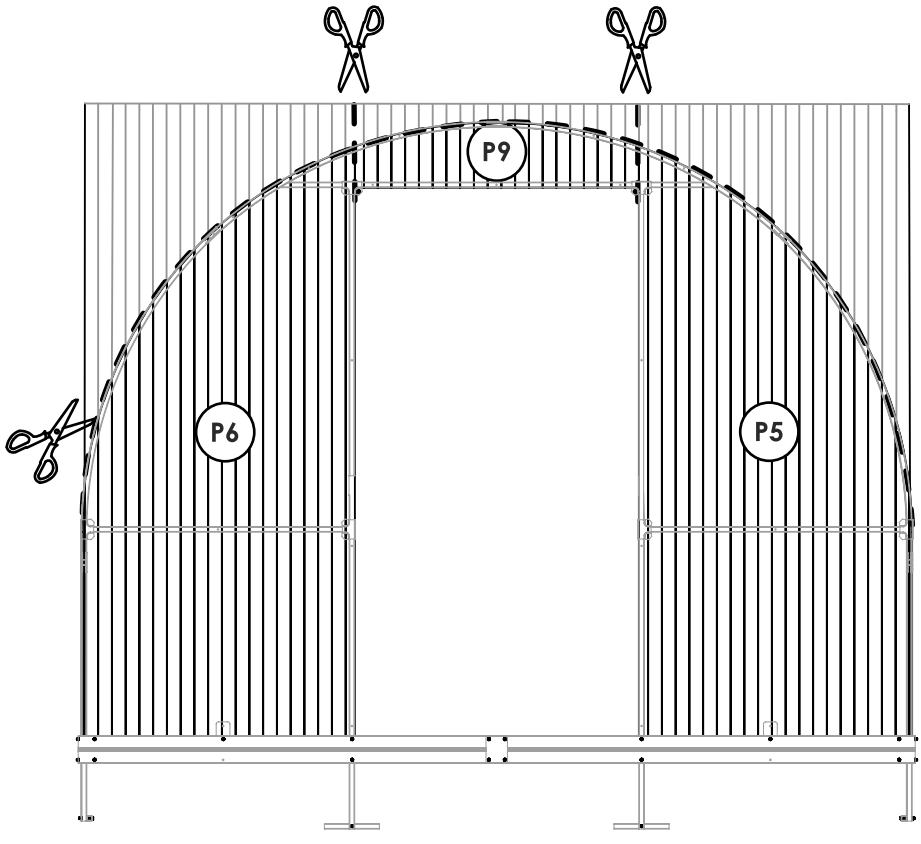

19

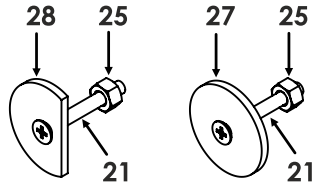

x25 x4

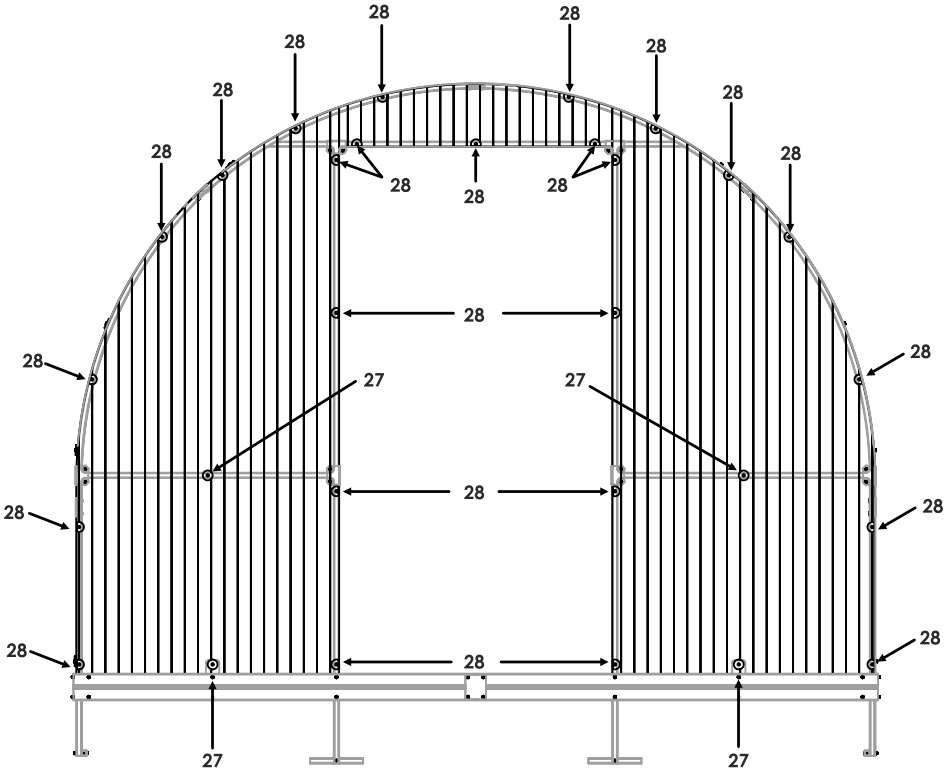

20

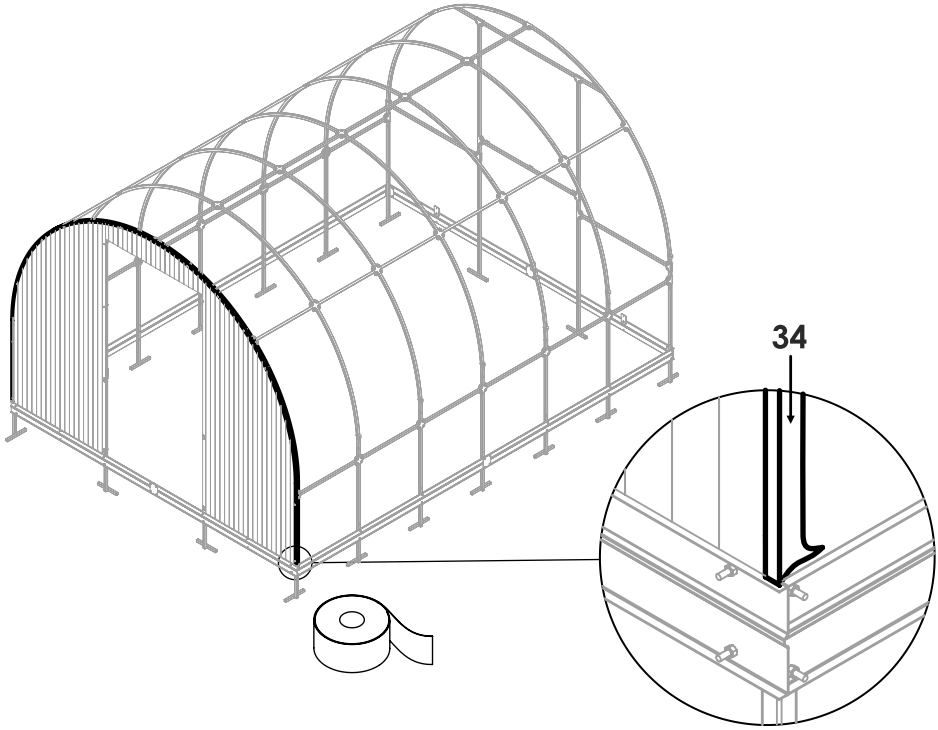

21

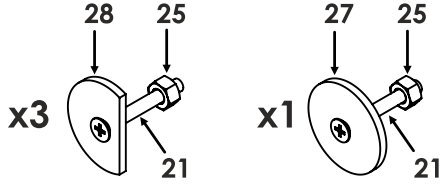

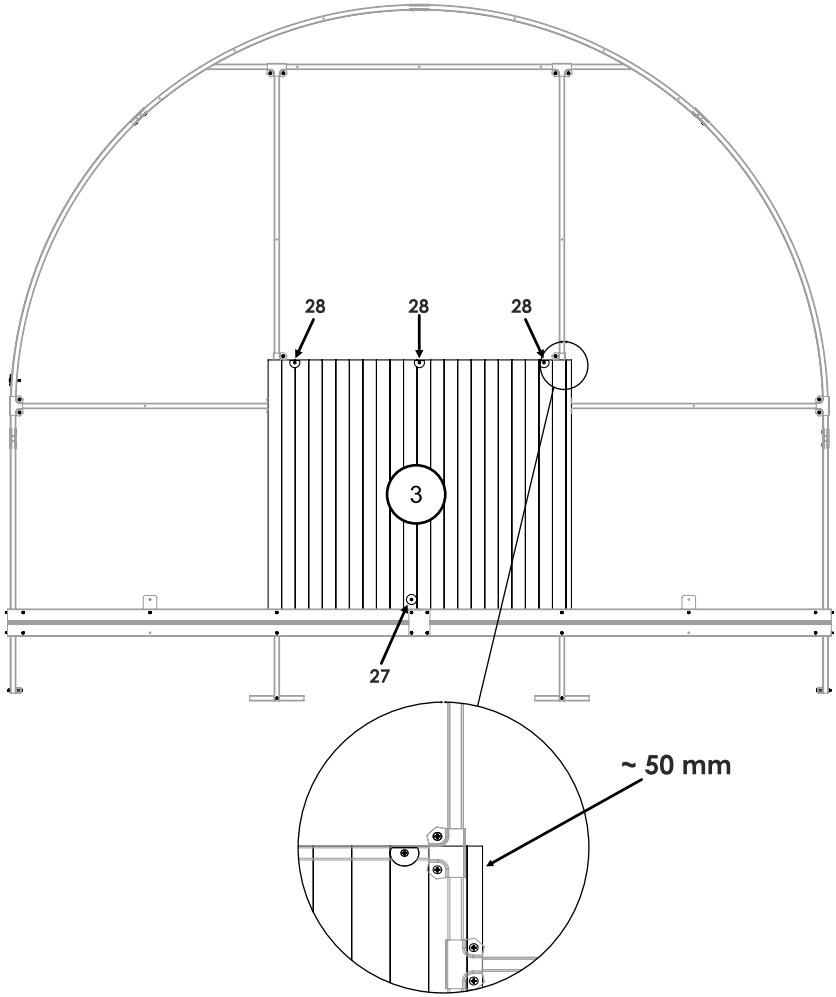

22

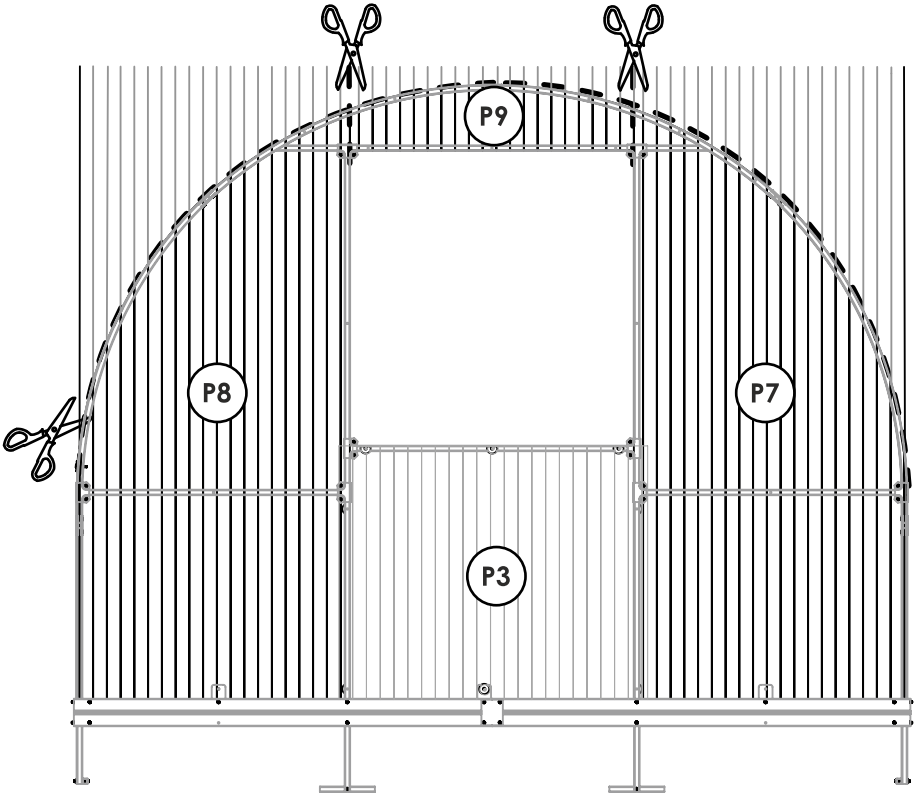

23

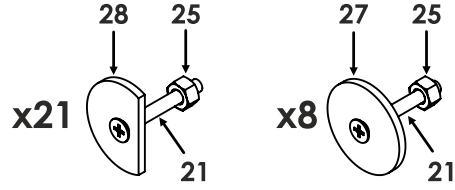
28
25
x21
21
27
25
x8
21

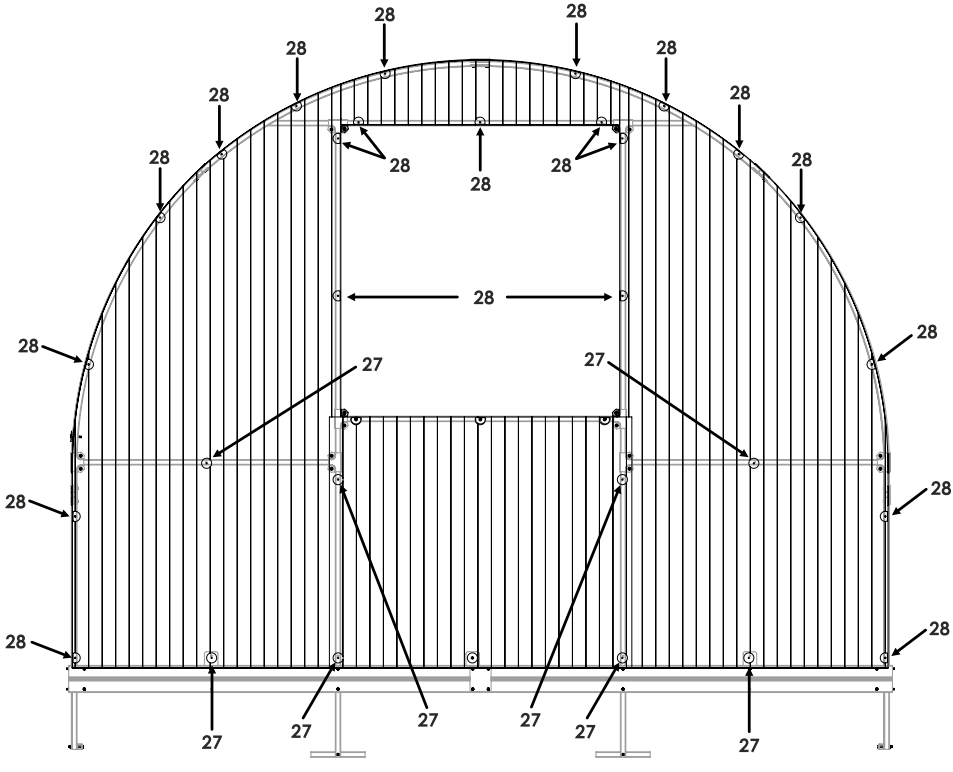
28
28
28
28
28
28
28
28
28
28
28
28
28
28
28
28
28
28
28
27
27
28
28
28
27
27
27
27
27
27
27

24

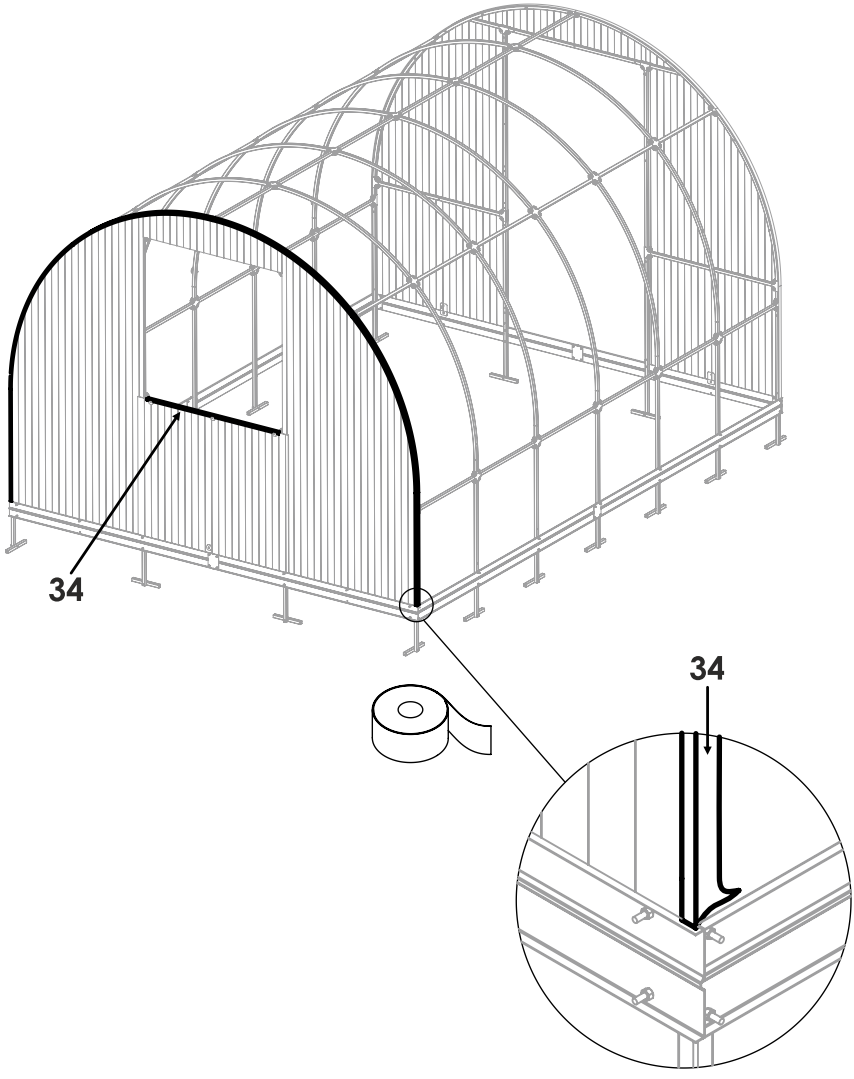

25

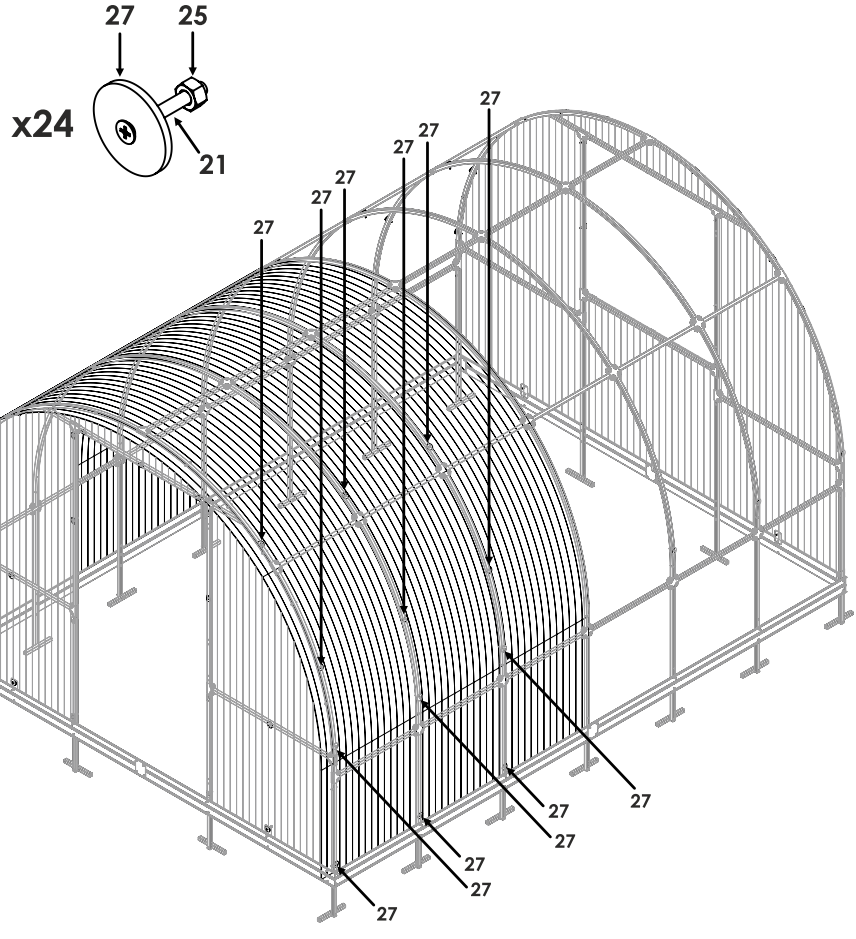

26

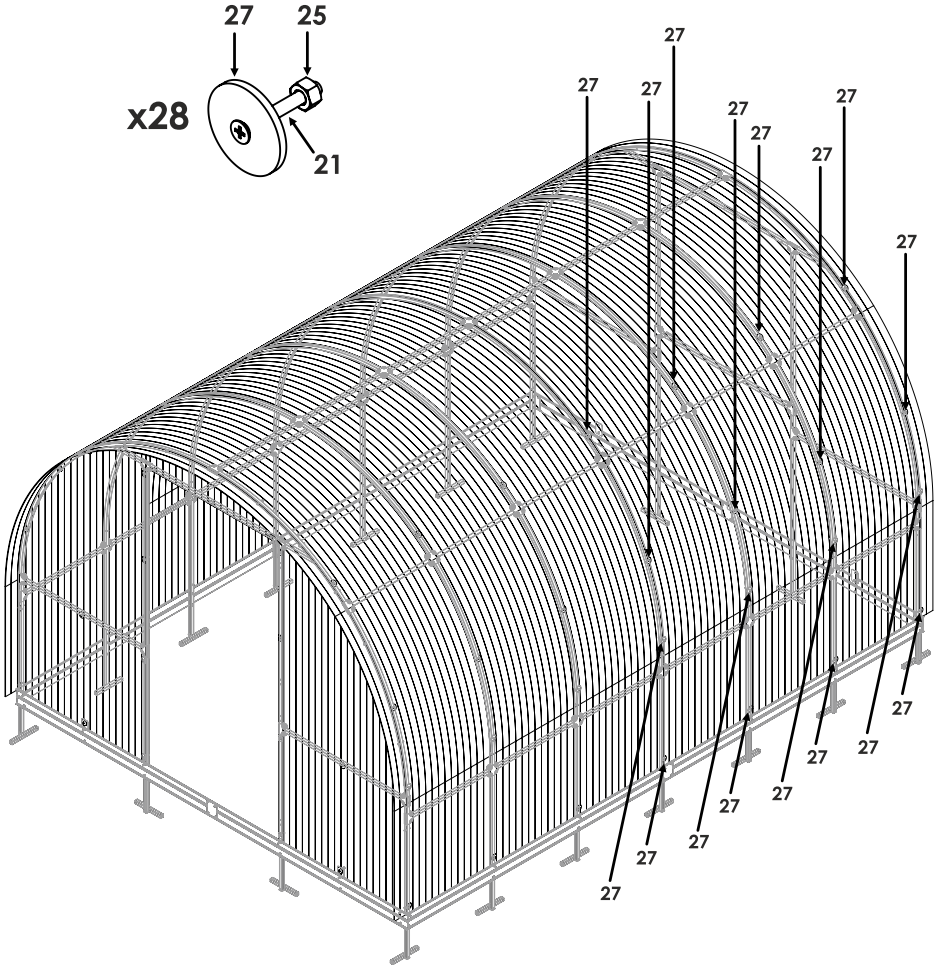

27

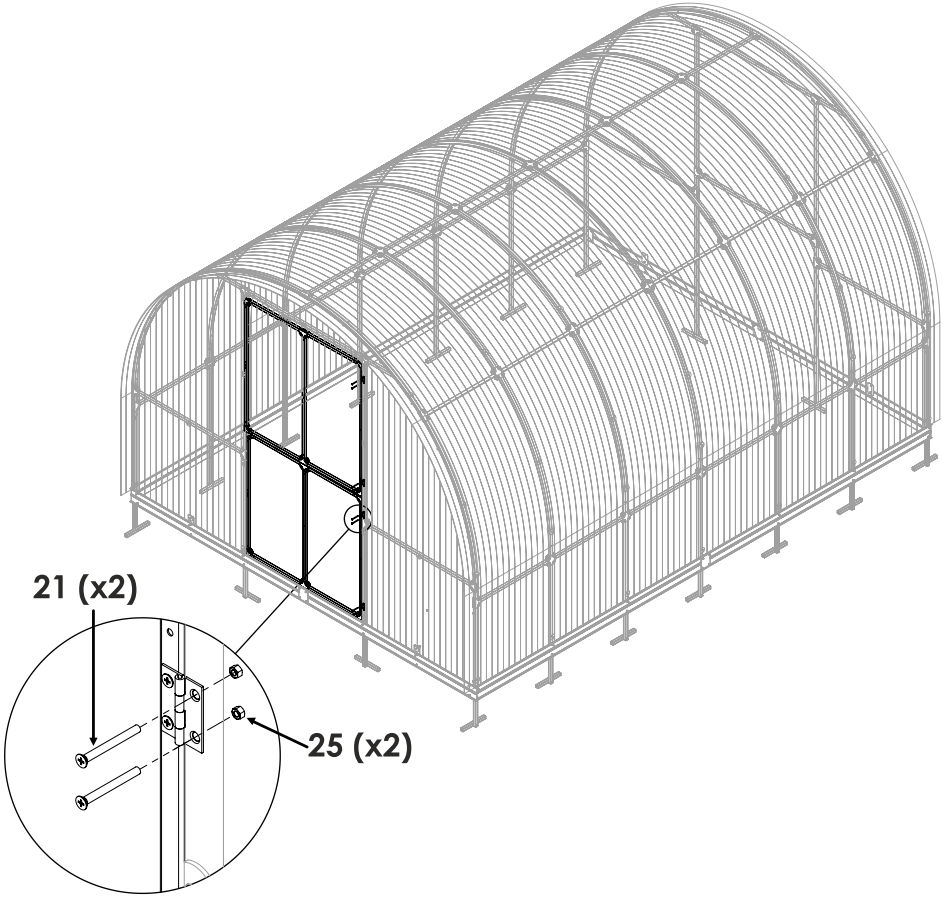

28

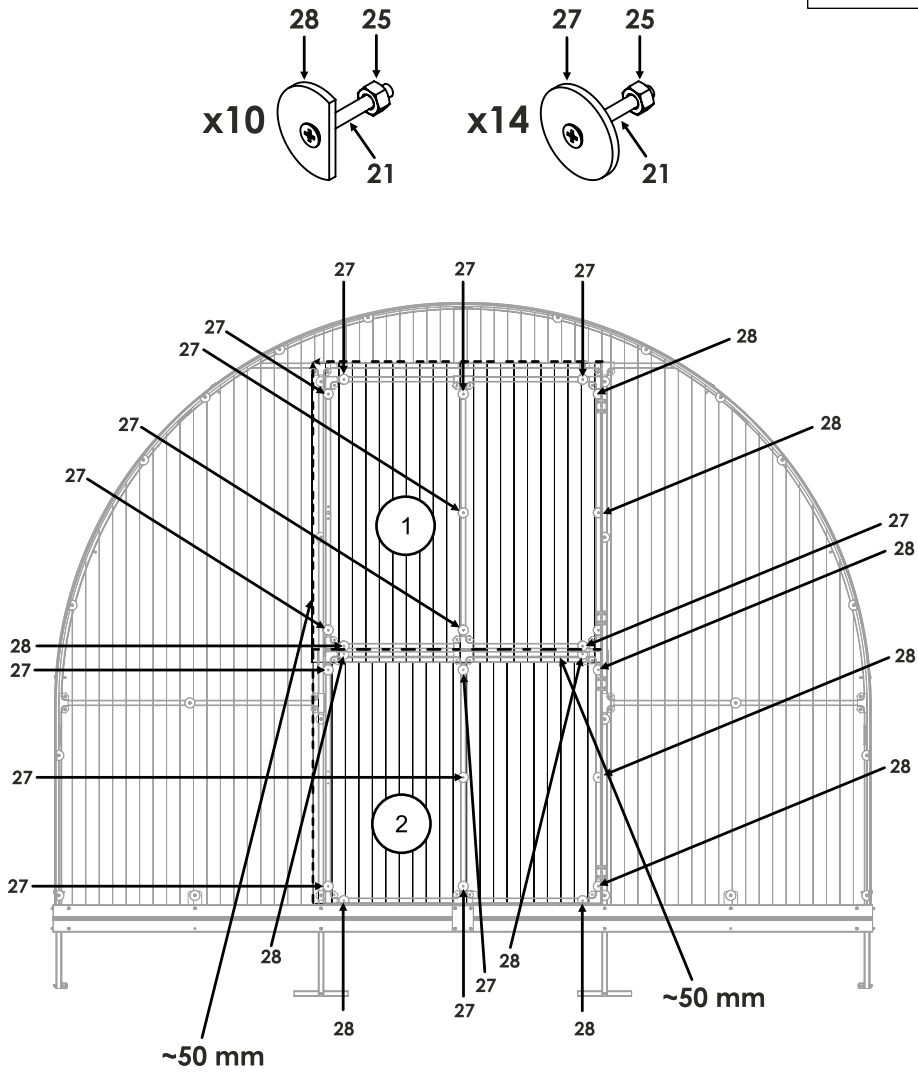

28
25
x10
21
27
25
x14
21
27
27
27
27
27
27
28
28
27
28
27
28
28
27
28
27
28
27
28
27
28
1
2
~50 mm
~50 mm

29

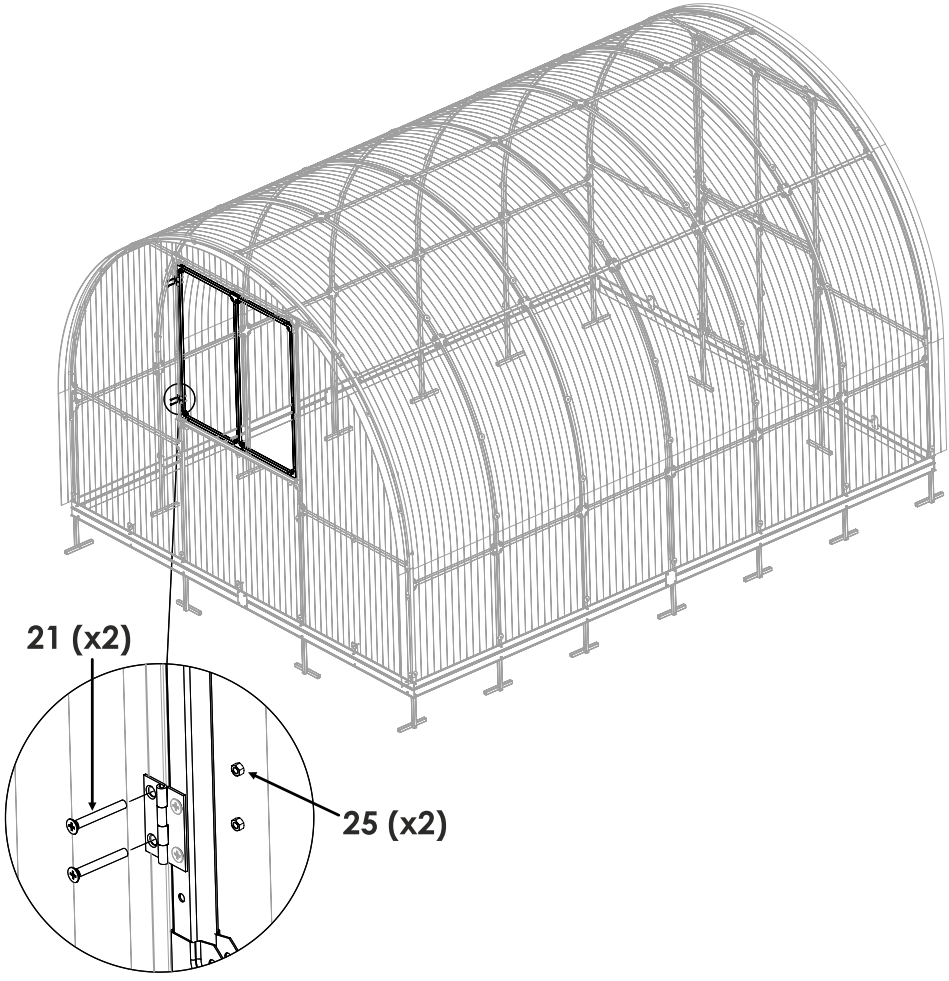

30

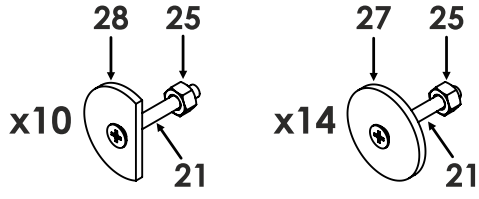

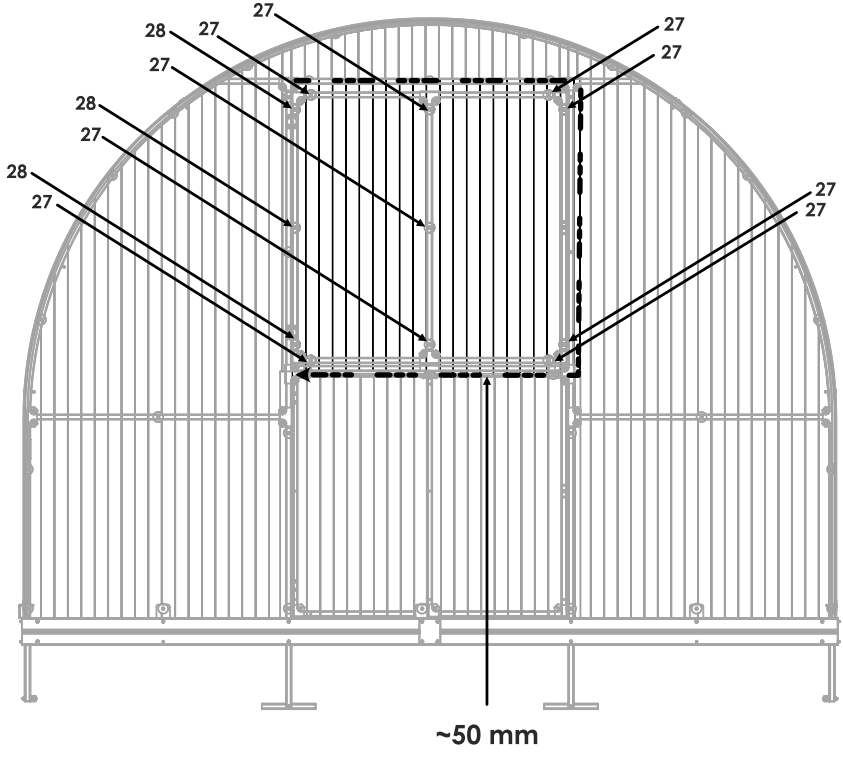

31

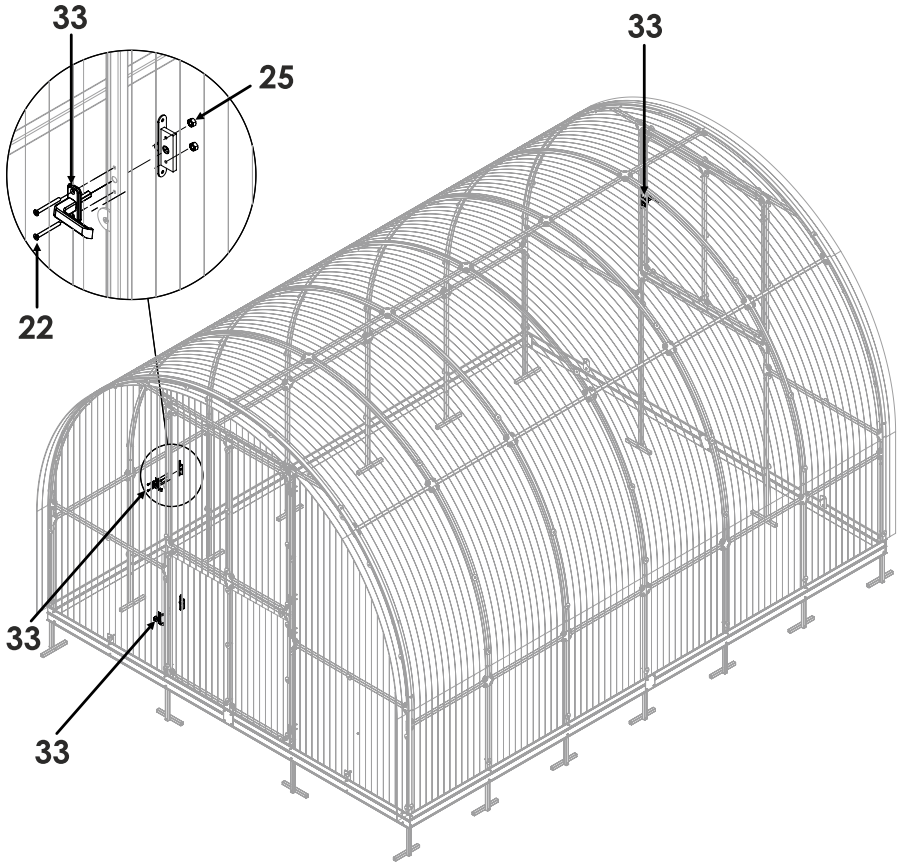

32

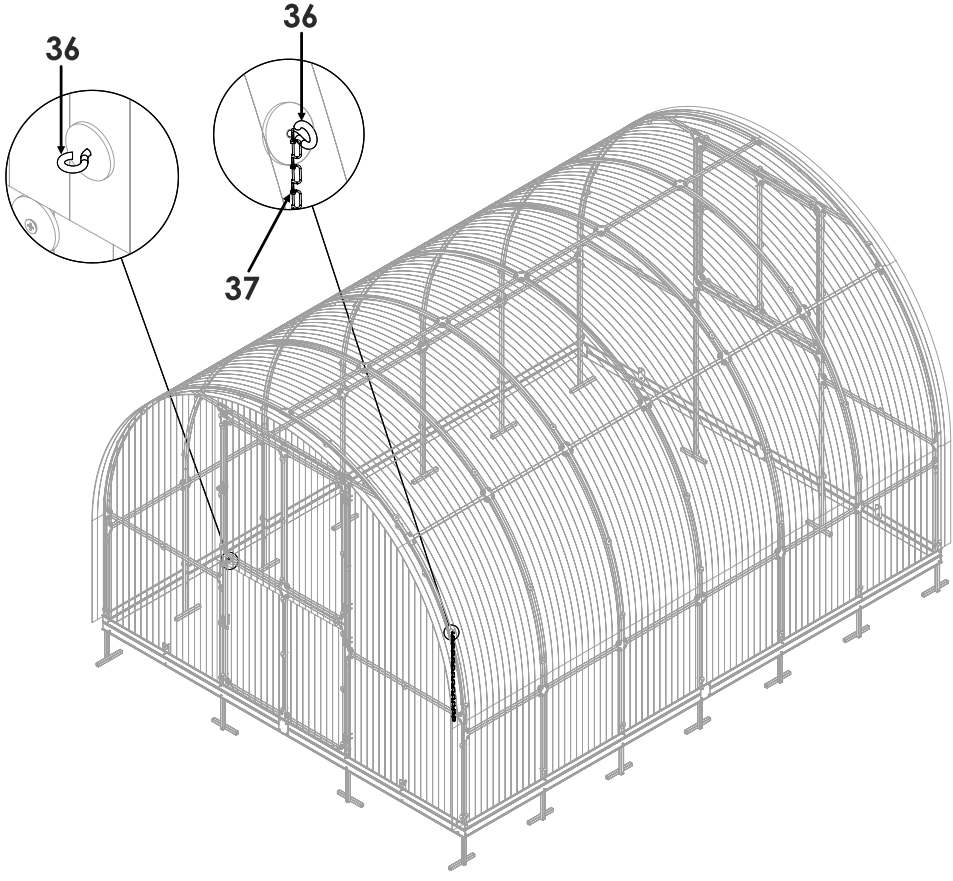

MEISTRO KODAS

JSC ,,Meistro kodas"
Company code 302498339
VAT code LT100005319313

www.meistrokodas.lt

Kaunas: Jonavos str. 250,
LT-44132, Lithuania
info@meistrokodas.lt
+370 683 88282, +370 646 06533

Kaunas District: Kumės str. 8,
Stanaičiai, LT-53285, Lithuania

Vilnius: Laisvės Ave. 82
LT-06125, Lithuania
vilnius@meistrokodas.lt
+370 674 22345, +370 602 23452

Baumera

Latvia: Miera iela 30 D,
Salaspils, LV-2169, Latvia
orders@baumera.lv
+371 295 55176

KLASIKA

MK PC diamonds

BPS BALTIC PLASTIC SOLUTIONS

MIKKO

KETER

Baumera

EXPAFOL

StarkeDACH

Orbesen Teknik ApS
Unique Greenhouse ventilation

MIRANDA FABRICS

Brett Martin

TENAX

GPPS raised seedbed
KLASIKA Woodlook